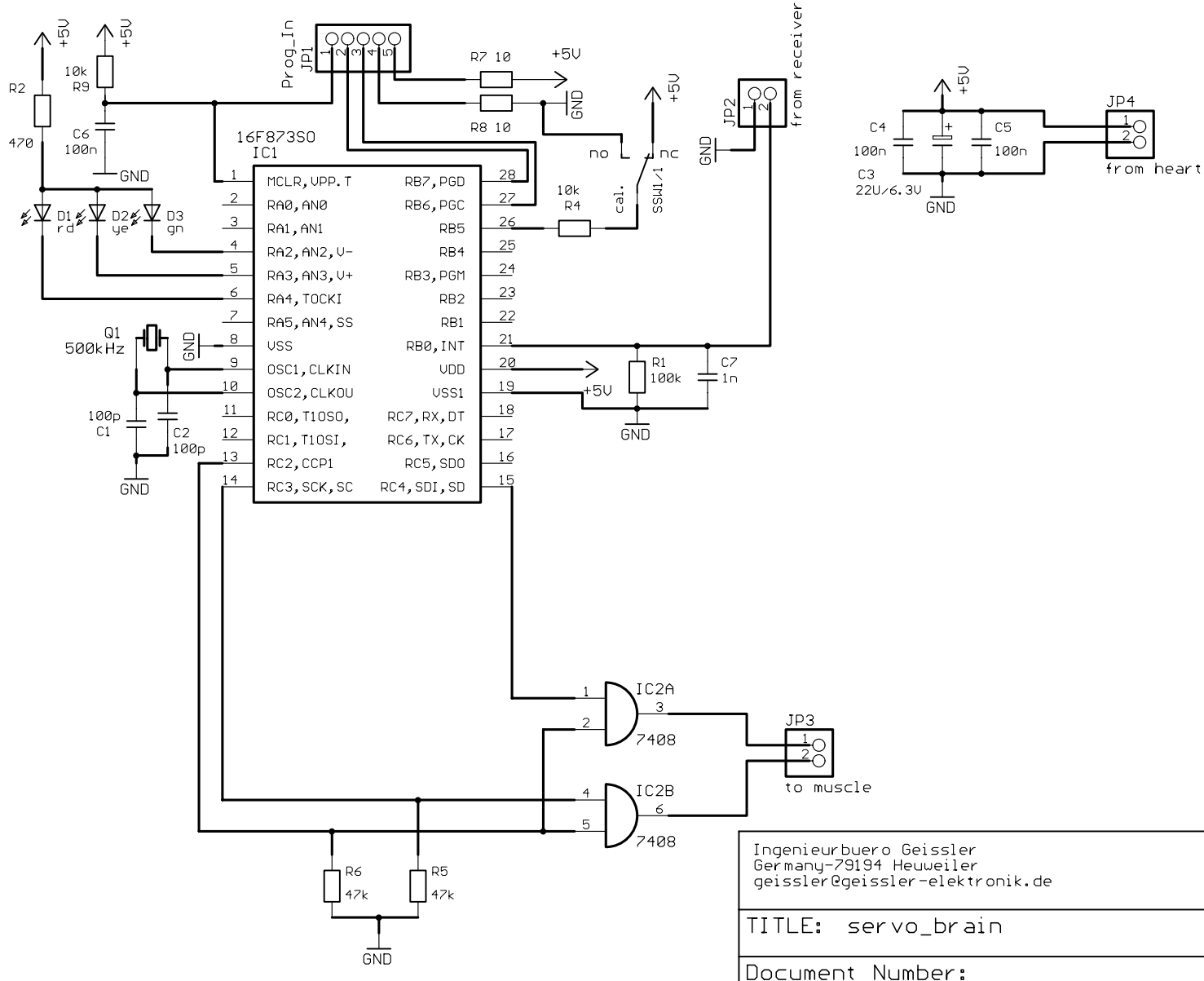

Ingenieurbuero Geissler
Germany-79194 Heuweiler
geissler@geissler-elektronik.de

TITLE: servo_brain

Document Number:

REV:

Date: 03.09.2001 11:47:08

Sheet: 1/1